WLP750–MR
TANK SPECIFICATIONS

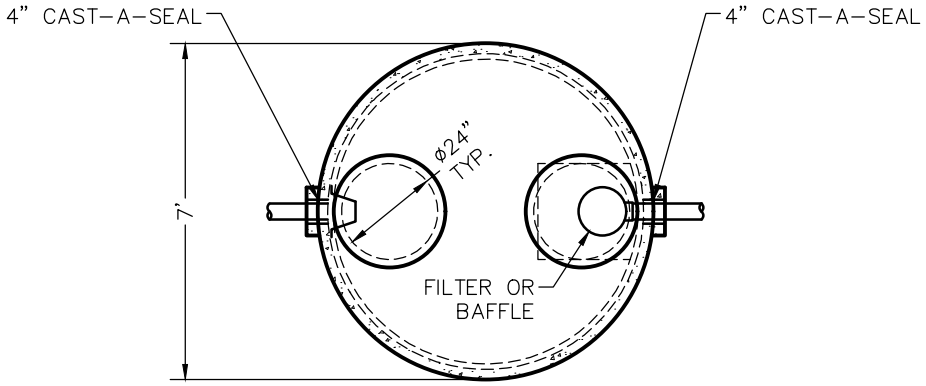

TOP VIEW

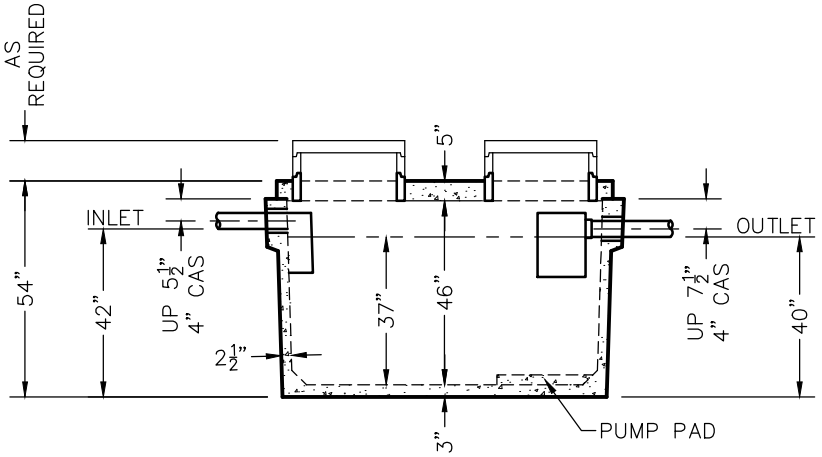

SIDE VIEW

DIMENSIONS:
- WALL: 2 1/2"
- BOTTOM: 3"
- COVER: 5"
- MANHOLE: 24" I.D. PRECAST CONCRETE RISER
- HEIGHT: 54"
- OUTSIDE DIAMETER: 7'–0"
- BELOW INLET: 42"
- LIQUID LEVEL: 37"
- WEIGHT: 6,150 LBS.

INLET AND OUTLET:
- 4" CAST–A–SEAL BOOT OR EQUAL GASKET

INLET AND OUTLET BAFFLE AND FILTER:
- WISCONSIN, SEE DETAIL #10
- (OTHER STATES SEE CHART)

LIQUID CAPACITY: 20.28 GAL/IN

HOLDING TANK:
- OUTLET HOLE PLUGGED
- ACTUAL CAPACITY: 790 GALLONS

LOADING DESIGN: 8'–0" UNSATURATED SOIL

TANK CAN BE USED AS:
- SEPTIC / HOLDING / PUMP OR SIPHON

COVER: MIX DESIGN #8 (NO FIBER)
TANK: MIX DESIGN #10 (STRUCTURAL FIBER)

CUSTOMIZED TANKS:
- FOR CUSTOM TANKS CONTACT WIESER CONCRETE

APPROVED
By Glen Schlueter at 8:19 pm, May 30, 2022

TANKS ARE MANUFACTURED TO MEET OR EXCEED ASTM C–1227 REQUIREMENTS

REVIEWED BY _____
REVIEW DATE _____

DRAWINGS SUBMITTED FOR APPROVAL
APPROVED BY: _____
APPROVAL DATE: _____
PRODUCTS NEEDED BY: _____

PRE–POUR: POST–POUR:
REV. DATE:
SCALE: 1/4" = 1'–0"
DRAWN BY: WCP
DATE: 00/00/00
FILE: wlp750–mr

WIESER CONCRETE
W3716 US HWY 10, MAIDEN ROCK, WI 54750
800–325–8456

WLP750–MR
SEPTIC MANUAL

SHEET NO. 1 OF 1